COMCAST

JOHN DEERE LANDSCAPING

1610 N BROADWAY AVE STOCKTON, CA

CONTACTS:

SEFNCO
DAVID VAVZINCAK 925-783-8427
COMCAST
CONTACT NAME XXX-XXX-XXXX

SCOPE OF WORK:

-FROM POLE 1 GO DOWN 25' RISER. DIRECTIONAL DRILL NORTH APPROX. 40'. DIRECTIONAL DRILL EAST APPROX. 8' TO ROW. PLACE 2" CONDUIT AND COMM CABLE IN BORE PATH.

BILL OF MATERIALS*:

48 FT - 2" SCHEDULE 40 CONDUIT

PROJECT DESCRIPTION*		
NEW AERIAL	=	0 FT.
OVERLASH	=	0 FT.
NEW UNDERGROUND	=	48 FT.
EXISTING UNDERGROUND	=	0 FT.
RISER (1)	=	25 FT.
TOTAL FOOTAGE	=	73 FT.

*ALL FOOTAGES AND MATERIALS ARE ESTIMATED

SHEET INDEX:

1 - COVER SHEET
2 - NOTES & LEGEND SHEET
3 - DETAILS SHEET
4 - PROPOSED CONSTRUCTION
5 - TRAFFIC CONTROL PLANS

PROJECT MAP:

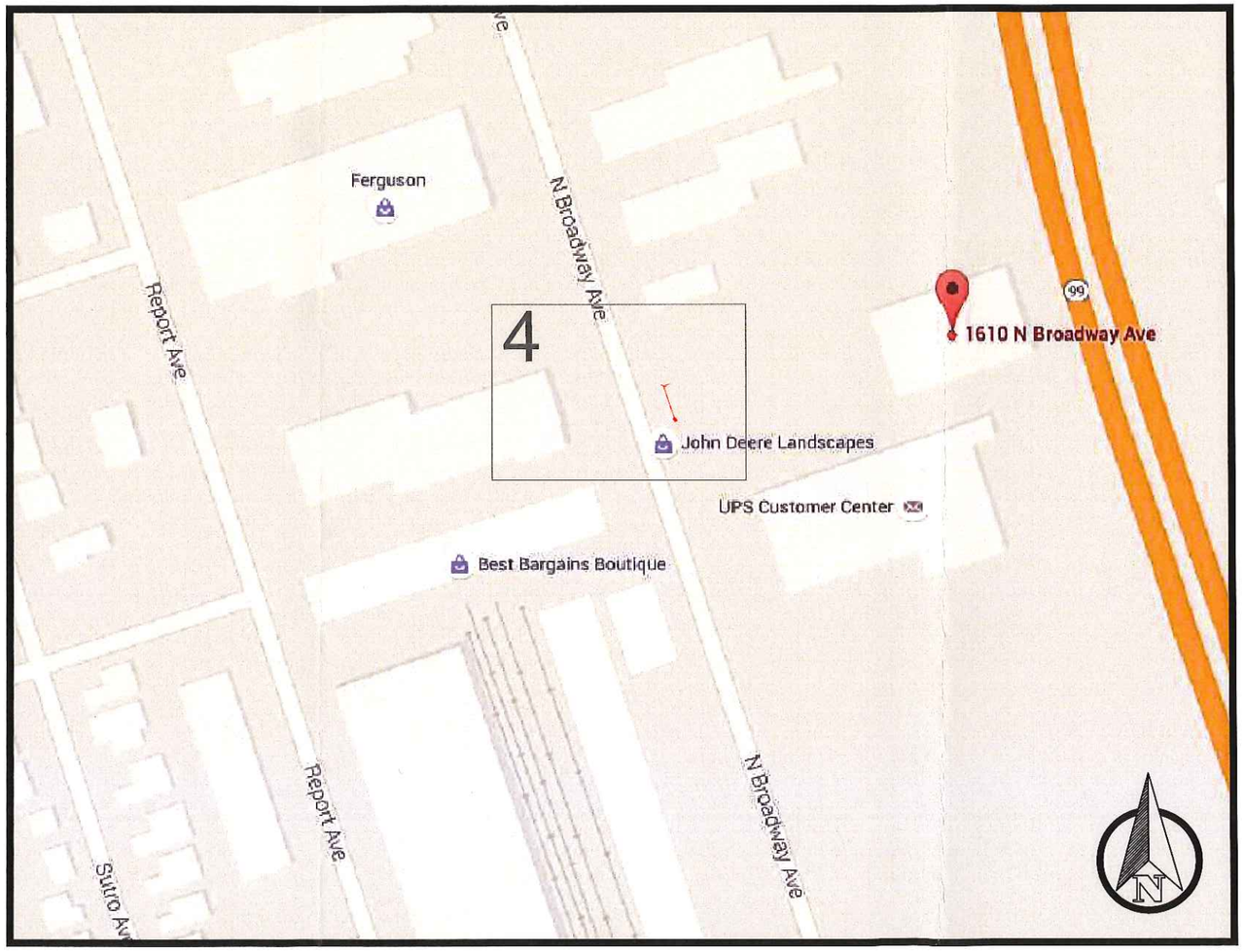

THIS IS PROPRITORY INFORMATION AND NOT MEANT FOR GENERAL PUBLICATION. ALL RIGHTS RESERVED SEFNCO COMMUNICATIONS

JOHN DEERE LANDSCAPING
1610 N BROADWAY AVE

221900
PERMIT

DATE	REVISION	BY	QC
09/04/15	PERMIT	NDP	XXX

COMCAST

SEFNCO COMMUNICATIONS
"DELIVERING EXCELLENCE"

COVER

GENERAL NOTES:

1. ALL VAULTS / HANDHOLES TO BE EQUIPPED WITH SECURITY LIDS WITH LOCKING BOLTS.
2. GROUND RESTORATION/RIGHT-OF-WAY SHALL BE RESTORED TO ORIGINAL OR BETTER CONDITION.
3. ALL 90 DEGREE BENDS IN CONDUIT CONSTRUCTION WILL BE A MINIMUM OF 36" RADIUS UNLESS SPECIFIED OTHERWISE.
4. BURIED FIBER OPTIC WARNING SIGNS SHALL BE PLACED AT EACH SIDE OF ALL ROAD CROSSINGS, AT CULVERTS, DITCHES AND IN A STRAIGHT LINE OF SIGHT SPACING OF APPROXIMATELY 500 FEET.
5. DEVIATIONS FROM THE ENGINEERED ROUTE REQUIRES A PROJECT MANAGER AND RIGHT-OF-WAY OWNER OR CARETAKER APPROVAL PRIOR TO CONSTRUCTION.
6. WHERE PERMITS FROM STATE, COUNTY, CITY, RAILROAD OR GOVERNMENT AGENCIES ARE REQUIRED, ALL WORK PERFORMED WILL COMPLY WITH THESE AGENCIES STANDARD SPECIFICATIONS.
7. THE PROJECT MANAGER WILL NOTIFY BUILDING MANAGEMENT WHEN WORK WILL BEGIN ON BUILDING. CONTRACTOR TO COORDINATE ROOM ACCESS AND WORK START AND STOP TIMES WITH BUILDING MANAGEMENT.
8. THE PROJECT MANAGER IS TO BE NOTIFIED BY THE CONTRACTOR 24 HOURS PRIOR TO CONSTRUCTION. SEE COMPANY CONTACT LIST FOR CONTACT NAME(s) AND TELEPHONE NUMBER(s).
9. THE PROJECT MANAGER WILL RESERVE THE RIGHT TO INSPECT AT ANY TIME THE WORK BEING PERFORMED BY THE CONTRACTOR. IF PROJECT MANAGER DETERMINES THAT THE WORK IS NOT BEING PERFORMED TO MINIMUM QUALITY STANDARDS, THEN THE CONTRACTOR SHALL PROVIDE REWORK AT HIS OWN COST.
10. ANY CHANGE IN PROJECT SCOPE, INCLUDING BUT NOT LIMITED TO, CONDUIT LENGTH, CONDUIT PATH, AERIAL PATH ETC., MUST BE APPROVED BY THE PROJECT MANAGER.
11. ALL CORING/CONSTRUCTION THAT WILL CAUSE NOISE AND/OR VIBRATION SHALL BE DONE WITHIN ALLOWED (9AM-3PM) BUSINESS HOURS.
12. ANY AND ALL UNDERGROUND UTILITIES ENCOUNTERED ARE THE RESPONSIBILITY OF THE CONTRACTOR TO LOCATE, PROTECT, AND REPAIR, IF DAMAGED.
13. ALL FOOTAGES ARE BASED ON FIELD GATHERED MEASUREMENTS, AS SUCH SOME VARIANCE SHOULD BE ANTICIPATED. ADJUST AS NEEDED.
14. ALL BURIED CONDUIT/CABLE WILL BE PLACED AT 36" MINIMUM COVER. SITE HAS POTENTIAL FOR ROCK THAT WOULD PREVENT THE ABILITY TO PROVIDE THE MINIMUM COVER. IN CASES WHERE THE MINIMUM COVER CAN NOT BE ACHIEVED, THE CONDUIT SHALL BE PLACED IN A SCH 40 EMT SLEEVE OR APPROVED EQUIVALENT.
15. WATER, SEWER, STORM SEWER AND EASEMENT LOCATIONS ARE BASED OFF OF CITY MAPS, NOT FIELD VERIFIED.
16. BORING OF AC PAVING IS REQUIRED AT ALL LOCATIONS AS INDICATED ON PLANS.
17. AT NO TIME SHALL CURBS, GUTTERS OR HANDICAP BE DISTURBED.
18. DOOR HANGERS ARE TO BE PLACED A MINIMUM OF 72 HOURS PRIOR TO START OF CONSTRUCTION.
19. PRIOR TO START OF CONSTRUCTION, CONTRACTOR SHALL PLACE MESSAGE BOARDS STATING LANE CLOSURES, AND DELAYS A WEEK IN ADVANCE. LOCATION OF THE MASSAGE BOARD SHALL BE COORDINATED WITH THE CITY INSPECTOR AT THE PRE-CONSTRUCTION MEETING.
20. LANE CLOSURES CANNOT EXCEED MORE THAN 300 FT. AT A TIME. FOR SAFETY PURPOSES THERE SHALL BE ONLY ONE CLOSURE AT A TIME ALONG INTERNATIONAL BLVD. MORE FLAGGERS WILL BE NECESSARY TO HELP VEHICLES AND PEDESTRIANS IN THE WORK ZONES DURING THE LANE CLOSURES.

DISCLAIMER:

1. IT IS THE RESPONSIBILITY OF THE CONSTRUCTION CONTRACTOR TO VERIFY ALL RIGHT OF WAY BEFORE CONSTRUCTION IS TO BEGIN. NO UNDERGROUND INSTALLATION REPRESENTED WITHIN THESE PLAN SHEETS IS PROPOSED OUTSIDE OF THE RIGHT OF WAY.
2. THE UNDERGROUND ROUTE DEPICTED IS PRELIMINARY AND WILL/MAY VARY ONCE UTILITIES HAVE BEEN FIELD LOCATED.
3. ANCHORING FOR THE AERIAL CONSTRUCTION IS TYPICALLY DETERMINED DURING CONSTRUCTION AND IS COLLECTED IN THE AS-BUILT PHASE.

LEGEND:

ROW	RIGHT-OF-WAY	(xxx') DIRECTIONAL DRILL	PROPOSED DIRECTIONAL DRILL
	TRAFFIC LANE	(xxx') BORE	PROPOSED BORE
	CENTERLINE	(xxx') EXISTING PULL THRU	EXISTING PULL THRU
	FENCE	(xxx') OPEN TRENCH	PROPOSED OPEN TRENCH
	GAURD RAIL		AERIAL STRAND

	PROPOSED BORE PIT		EXISTING POLE W/ NEW RISER	S D C	MANHOLE
	STREET/SIGNAL/TRAFFIC LIGHT		LANDSCAPING/TREE		SEWER
6	CONSTRUCTION NOTE		TRAFFIC FLOW		WATER
	FIRE HYDRANT	V	PROPOSED VAULT		STORM DRAIN
CB	CATCH BASIN		POTHOLE LOCATION		POWER
	CHANNELIZATION		BUILDING OUTLINE		COMMUNICATIONS
		5+39	STATIONING		GAS

FIBER PLACEMENT NOTES:

1. CONTRACTOR IS RESPONSIBLE FOR LOCATING ALL UTILITIES 48 HOURS PRIOR TO CONSTRUCTION ACTIVITY SEE LOCAL DIRECTORY FOR CONTACT TELEPHONE NUMBER OF LOCAL CALL BEFORE YOU DIG AGENCY.
2. CONTRACTOR SHALL RECORD SEQUENCE # OF FIBER CABLE AT EVERY WORK POLE, MANHOLE, FIBER STORAGE LOOP AND TAIL LOCATION. CONTRACTOR TO PROVIDE PROJECT MANAGER WITH SEQUENCE NUMBERS AT PROJECT COMPLETION.
3. SLACK LOOP AND SNOWSHOE STORAGE LOCATIONS SHALL BE DETERMINED ON CONSTRUCTION DRAWINGS, HOWEVER, REEL LENGTHS OF FIVE HUNDRED FEET (500') OR LESS ON LARGE COUNT FIBER OR THREE HUNDRED FEET (300') OR LESS ON SMALL COUNT FIBER ARE DIFFICULT TO USE AND SHOULD BE PLACED AS FSL'S, NOT CUT AND RETURNED.
4. FIBER OPTIC IDENTIFICATION TAGS SHALL BE PLACED AT EVERY WORK POLE, MANHOLE, FIBER, STORAGE LOOPS, SPLICE CASES AND WHERE INDICATED BY PROJECT MANAGER. TAGS NEED TO BE PLACED SO AS TO BE READ FROM THE GROUND.
5. CABLE LUBRICATION SHALL BE USED TO REDUCE PULLING TENSION. LUBRICANTS MUST NOT CONTAIN ANY PETROLEUM PRODUCTS.
6. A 100 FOOT FIBER COIL MUST REMAIN IN ALL VAULTS UNLESS OTHERWISE NOTED.
7. ALL BURIED INFRASTRUCTURE MUST BE ACCOMPANIED WITH WARNING TAPE AND A TRACER WIRE, AT RISER POLES THE LOCATE WIRE SHALL BE ACCESSIBLE AT THE BASE OF THE RISER.
8. ALL RISERS WILL BE CAPPED AT ALL TIMES.
9. ALL FIBER SHALL BE MARKED AS TO DIRECTION IN EACH VAULT. RED-NORTH, GREEN-SOUTH,YELLOW-EAST, AND BLUE-WEST. DO NOT TAPE FIBER CABLES TOGETHER IN RISER.

811 Know what's below. Call before you dig.

JOHN DEERE LANDSCAPING
1610 N BROADWAY AVE

221900
PERMIT

DATE	REVISION	BY	QC
09/04/15	PERMIT	NDP	XXX

COMCAST

SEFNCO COMMUNICATIONS
"DELIVERING EXCELLENCE"

NOTES & LEGEND

TYPICAL DETAILS

POLE RISER

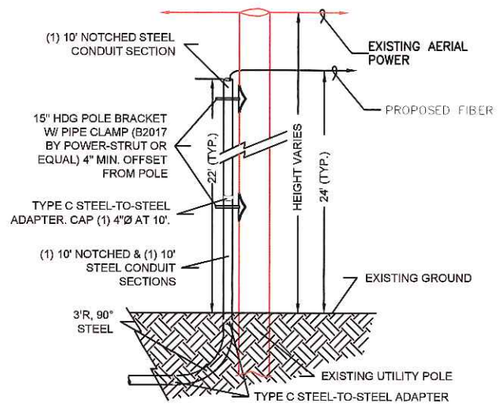

TYPICAL POLE RISERS (2) 4"Ø

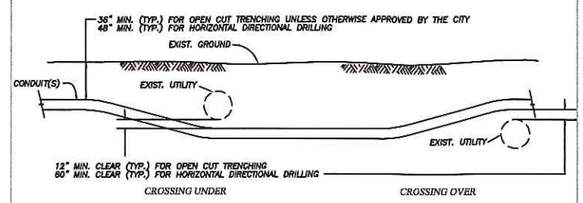

TYPICAL UTILITY CROSSING DETAIL

UTILITY CROSSING

TRENCH

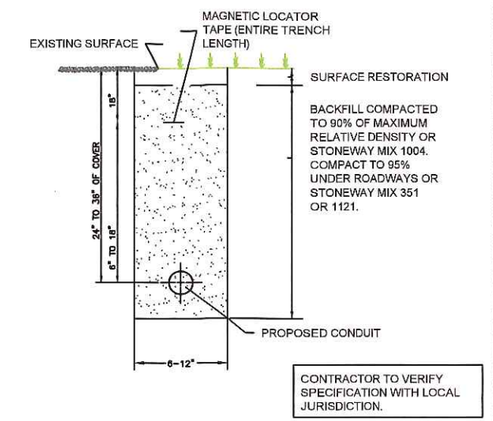

TYPICAL TRENCH DETAIL

VAULT

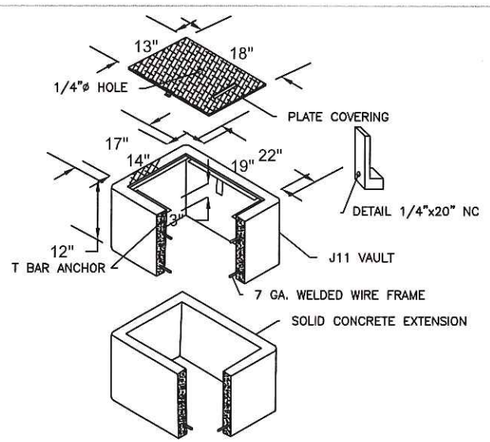

TYPICAL VAULT DETAIL

POT HOLE REPAIR

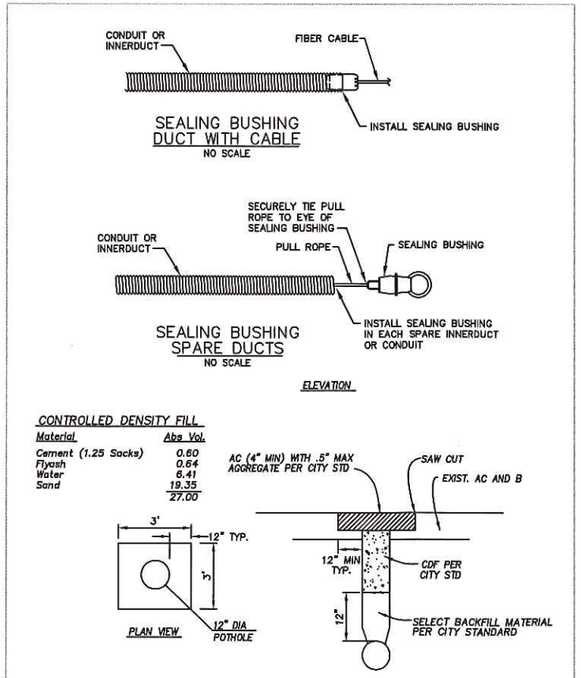

TYPICAL POT HOLE REPAIR DETAIL

MANHOLE

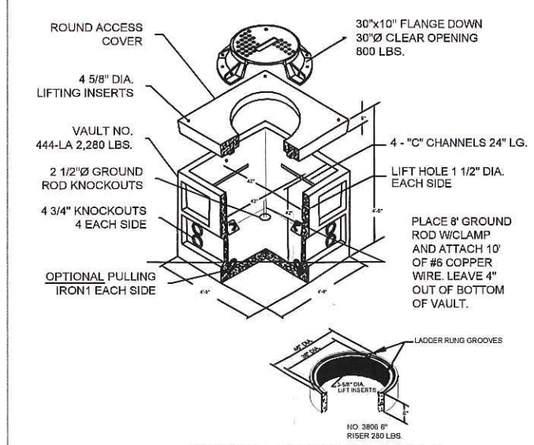

TYPICAL MANHOLE DETAIL

JOHN DEERE LANDSCAPING
1610 N BROADWAY AVE

221900
PERMIT

DATE	REVISION	BY	QC
05/04/15	PERMIT	NDP	XXX

COMCAST

SEFNCO COMMUNICATIONS
"DELIVERING EXCELLENCE"

NO SCALE

CONSTRUCTION NOTE:

1. GO DOWN 25' RISER. DIRECTIONAL DRILL NORTH 40'. PLACE NEW 2" CONDUIT & COMM CABLE.
2. DIRECTIONAL DRILL EAST APPROX. 8' END AT ROW. PLACE NEW 2" CONDUIT & COMM CABLE.

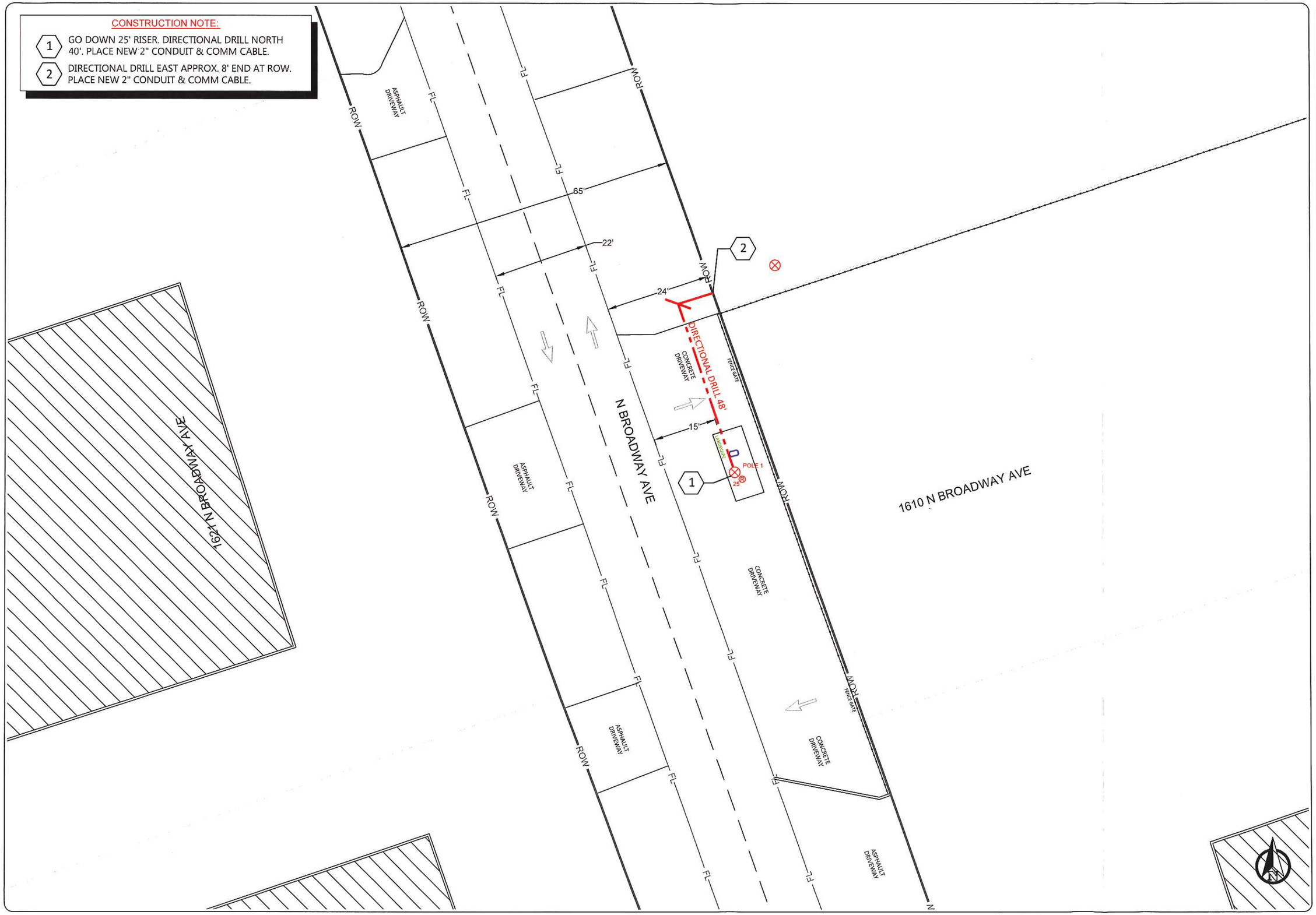

JOHN DEERE LANDSCAPING
1610 N BROADWAY AVE

22190

PERMIT

DATE	REVISION	BY	QC
09/04/15	PERMIT	NDP	XXX

COMCAST

SEFNCO COMMUNICATIONS

"DELIVERING EXCELLENCE"

SCALE: 1"=20'

0 10' 20'

SIGN SPACING = X (1)		
RURAL ROADS & URBAN ARTERIALS	35 / 40 MPH	350'±
RURAL ROADS, URBAN ARTERIALS, RESIDENTIAL & BUSINESS DISTRICTS	25 / 30 MPH	200'± (2)
URBAN STREETS	25 MPH OR LESS	100'± (2)

(1) ALL SPACING MAY BE ADJUSTED TO ACCOMMODATE INTERSECTIONS AND DRIVEWAYS.
(2) THIS SPACING MAY BE REDUCED IN URBAN AREAS TO FIT ROADWAY CONDITIONS.

MINIMUM SHOULDER TAPER LENGTH = L/3 (feet)										
SHOULDER WIDTH (feet)	Posted Speed (mph)									
	25	30	35	40	45	50	55	60	65	70
8'	40	40	60	90	-	-	-	-	-	-
10'	40	60	90	90	-	-	-	-	-	-
USE A 3 DEVICES TAPER FOR SHOULDERS LESS THEN 8'										

CHANNELIZATION DEVICE SPACING (feet)		
MPH	TAPER	TANGENT
35/40	30	60
25/30	20	40

BUFFER DATA										
LONGITUDINAL BUFFER SPACE = B										
SPEED (MPH)	25	30	35	40	45	50	55	60	65	70
LENGTH (feet)	155	200	250	305						

BUFFER VEHICLE ROLL AHEAD DISTANCE = R	
TRANSPORTABLE ATTENUATOR MINIMUM HOST VEHICLE WEIGHT 15,000 LBS. THE MAXIMUM WEIGHT SHALL BE IN ACCORDANCE WITH THE MANUFACTURERS RECOMMENDATION.	30 FEET MIN. TO 100 FEET MAX.
PROTECTIVE VEHICLE MAY BE A WORK VEHICLE STRATEGICALLY LOCATED TO SHIELD THE WORK AREA.	NO SPECIFIED DISTANCE REQUIRED

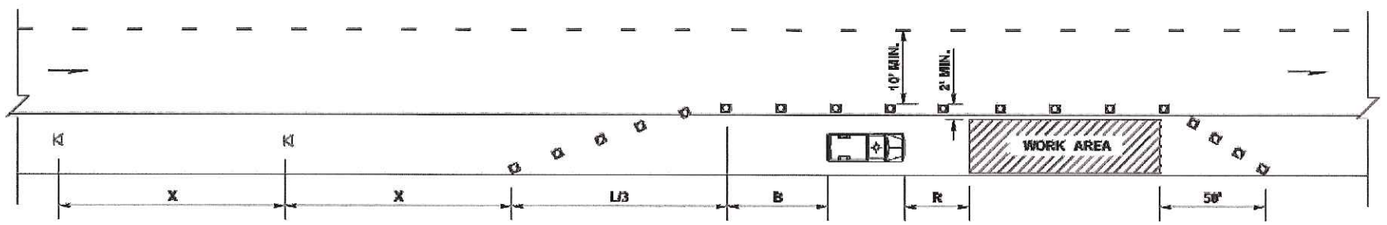

W20-1

W21-5

LEGEND

- TEMPORARY SIGN LOCATION
- CHANNELIZING DEVICES
- PROTECTIVE VEHICLE

SHOULDER CLOSURE - LOW SPEED

(40 MPH OR LESS)

NOT TO SCALE

NOTES:

1. DEVICE SPACING FOR THE DOWNSTREAM TAPER SHALL BE 20'(FT).
2. ALL SIGNS ARE BLACK ON ORANGE.

JOHN DEERE LANDSCAPING

1610 N BROADWAY AVE

22190

TCP1

DATE	REVISION	BY	QC
09/04/15	TRAFFIC CONTROL PLAN	NDP	XXX

SELECT LOGO FROM PULL DOWN

SEFNCO COMMUNICATIONS

"DELIVERING EXCELLENCE"